FD-30 & FD-40 Floating Spindle Mount

User Manual

Ver. 1.0

Nordbo Robotics
Agerhatten 27A, Entrance 4
DK- 5220 Odense, Denmark

Phone: +45 81 81 98 81
info@nordbo-robotics.com
CVR/VAT: 34697728

NORDBO ROBOTICS

Copyright © 2018 by Nordbo Robotics. All rights reserved

Copyright

Copyright © 2019 Nordbo Robotics. All Rights Reserved. No part of this manual may be reproduced or transmitted in any form or by any means, electronic or mechanical, including photocopying and recording, for any purpose without the express written permission of Nordbo Robotics.

Disclaimer

The information provided in this documentation contains general descriptions of use, of one or more of Nordbo Robotics' products. Following this documents instruction for installation and use must not be considered a substitute for making a risk assessment and testing the specific application and setup. Neither Nordbo Robotics nor any of our affiliates or subsidiaries shall be held responsible for the consequences that arise from misuse of – or misunderstanding of – any information stated in this document.

If any instructions are considered unclear it is the user's responsibility to contact Nordbo Robotics for clarification of the issue(s) before making use of said unclear instructions.

If the user has any suggestions for improvements, amendments or if errors have been found in this release, please notify Nordbo Robotics.

Nordbo Robotics reserves the right to make refinements or changes without notice.

Warranty

Warranty void if products are opened. The warranty further excludes failure resulting from improper use or installation, normal wear and tear, abuse, accidents, neglect, fire, water, lightning or other acts of nature, causes external to the product or other factors beyond Nordbo's control.

Contact

Nordbo Robotics A/S
Agerhatten 27A Entrance 4
5220 Odense, Denmark

Phone: +45 81 81 98 81
Mail: Info@nordbo-robotics.com

Table of contents

1. Introduction 3
1.1. Intended use 3
1.2. Prerequisites 3
1.3. Safety Warnings 3
2. Product information 4
2.1. Product overview 4
2.2. Technical specifications 5
2.3. Mechanical specifications 5
3. Installation 6
3.1. Mounting the floating spindle 7
3.2. Mounting the spindle 7
3.3. Connect air supply to the floating spindle 8
3.4. Force adjustment by regulating the air supply 9

1. Introduction

1.1. Intended use

The spindle mount (FD-30 and FD-40) is to be used only for the fixation of spindles matching the requirements of the specific models. The product is intended to be fixated either on a table or on a robot. The product must be used with protective equipment in accordance to the EC Machinery Directive.

1.2. Prerequisites

The manual must be read thoroughly, and a risk assessment of the complete application must be performed before installing and making use of the product. The person executing the instructions of this manual must have basic knowledge and skills related to the use of a spindle and have knowledge of the risks of working with a robot.

1.3. Safety Warnings

Following instructions must be read thoroughly by anyone intending to use this product.

Warning! This symbol indicates that potentially hazardous, dangerous or unwanted situations can arise from not following the instructions correctly. If safety instructions are not followed properly it may result in death, personnel injury or equipment damage.

The user must read and understand the installation guide and potential safety precautions related to the use of the spindle before use. If installing the product on a robot, the robot must by **powered off** before attempting to attach the spindle mount to the robot. Likewise, the spindle must always be **powered off** before attempting to connect it to the floating mount.

The product may be damaged if dropped on hard surfaces. Be aware that bolts can be damaged or made not usable if the user overtightens the bolts or uses the wrong tool to tighten the bolts. Nordbo Robotics is not liable for any damage or injury resulting from misuse.

Read and understand the manual accompanied by the spindle before installing it into the mount.

2. Product information

2.1. Product overview

The FD-30/40 is a robust flexible mount for spindles used demanding applications. The product is well suited in applications such as deburring and flash removal but can also be used in a variety of other applications. The pneumatically controlled force compensation allows the spindle to overcome surface irregularities and maintain a constant settable force. This enables consistent deburring of irregular parts by the application of air pressure to the spindle.

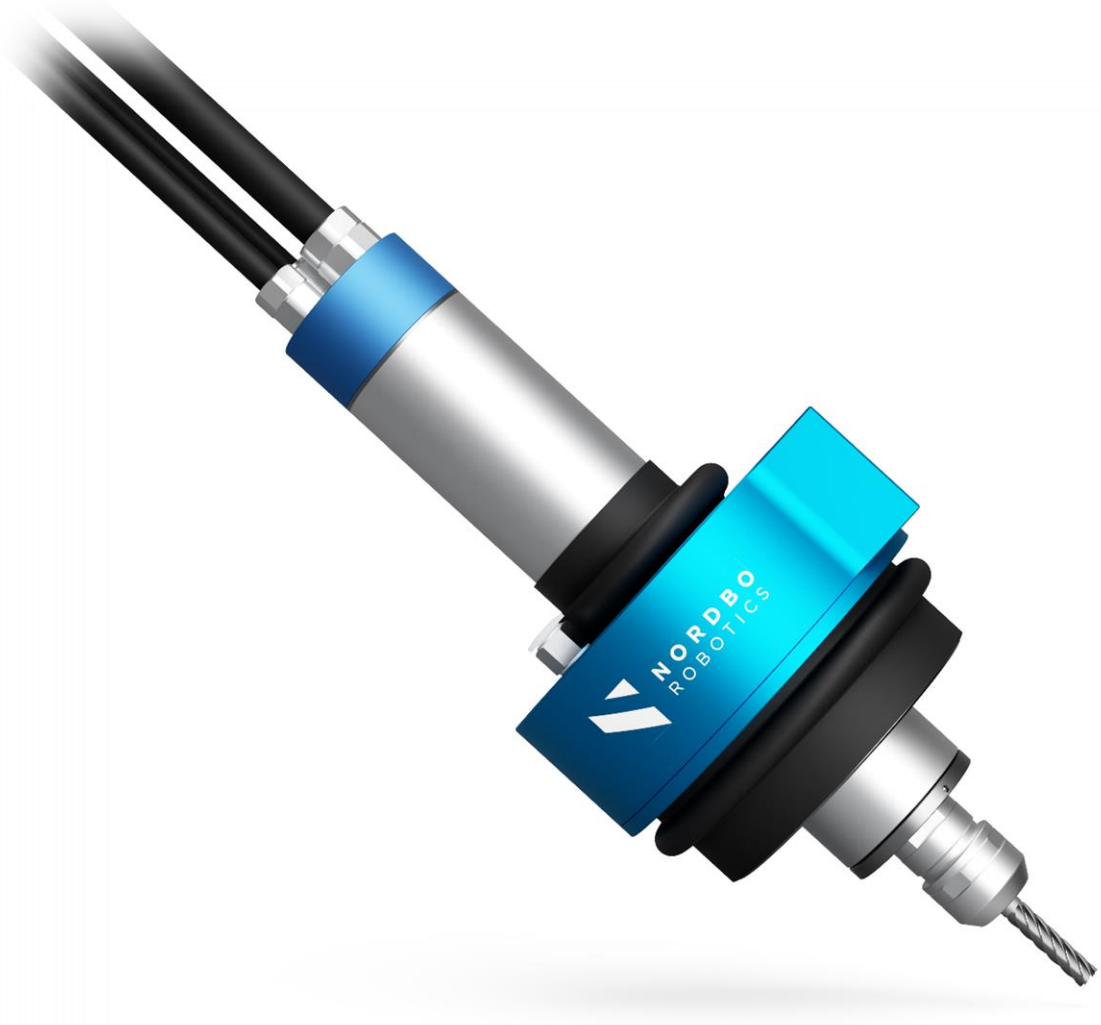

2.2. Technical specifications

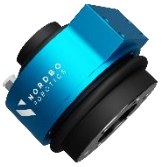

Model	FD-30	FD-40
Height	85,3 mm	85,3 mm
Weight	1172 g	1111 g
Diameter Spindle (Ø)	30 mm	40mm
Max. Tilt (x,y)	5°	5°
Move (at max. tilt angle)	360°	360°
Contraction (z)	5 mm	5 mm
Mounting Holes	4x M5	4x M5
Clamping bolts (Hex)	3 mm	3 mm
Air Connection - hose (Ø)	6 mm	6mm
Max. Air Pressure	0,7MPa	0,7MPa

2.3. Mechanical specifications

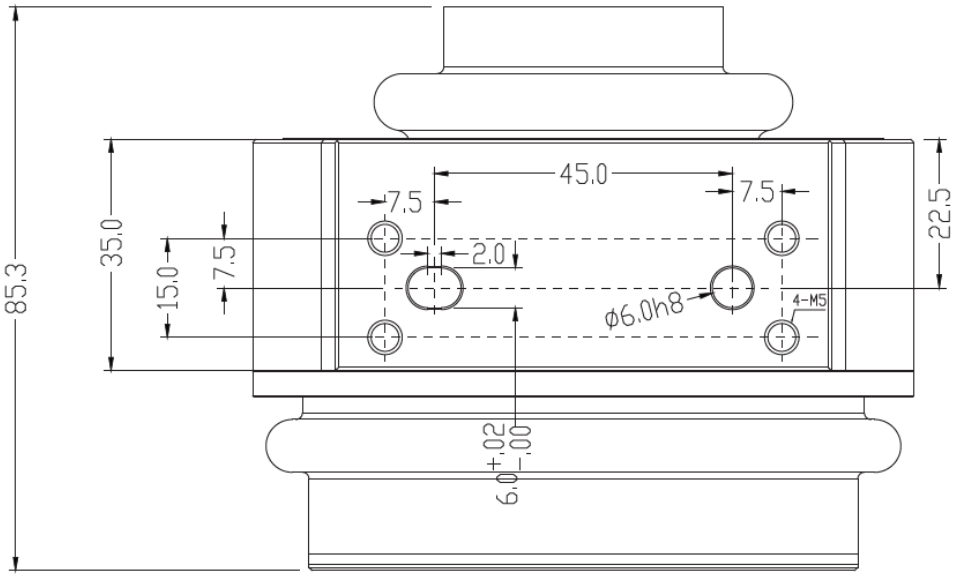

3. Installation

The Floating Spindle Mount is delivered fully assembled without air filters, air regulators and interface plates which is sold separately. These additional items must be obtained before installing the product. The following section describes the procedure for installing a spindle in the mount.

The chapter is as divided into the following steps:

- **3.1 Mounting the floating spindle**
- **3.2 Inserting the spindle**
- **3.3 Supplying air to the floating spindle**
- **3.4 Using air supply to regulate force**

3.1. Mounting the floating spindle

The floating spindle is mounted from the base of the product. If no mounting plate is purchased, a mounting plate will need to be developed by the system integrator or by the owner/user of the FSM.

⚠ **Warning! The user must make sure that the robot is disconnected and moving parts must be fixated during this step. Unintended movement may cause harm to equipment and/or personnel.**

3.2. Mounting the spindle

To mount the spindle in the FD-30/40 the user will need a 3 mm hex key to tighten the bolts on the top of the product to clamp the spindle in the holder.

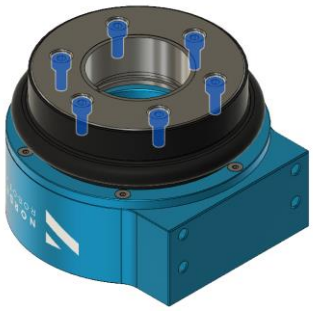

Step 1

Loosen the 6 bolts placed around the endplate.

Step 2

Insert the spindle in the middle of the product until spindle reaches the desired height. Control that the rubber covers the spindle in both ends.

Step 3

When the right position is obtained, cross-tighten all clamping bolts with a torque of 7 Nm**.**

Step 4

Push and pull the spindle in the mount to ensure that it is not moving. If the spindle moves, tighten all bolts again and repeat the action.

3.3. Connect air supply to the floating spindle

To connect the air supply to the floating spindle the user will need an air regulator, an air filter and a 6 mm rubber hose. The air regulator and air filter can be separate or combined units.

⚠ **Warning! The spindle must be disconnected from any electric/air supply during this step.**

Step 1

To regulate the air pressure, the floating spindle needs to be connected to an air supply through an air-regulator with a built-in filter. Connect a 6 mm tube to the air-regulator.

Obs.! If the air regulator does not have a built-in filter, then a filter must be added between the air regulator and the spindle mount to supply clean air.

Step 2

Connect the air supply to the floating spindle by inserting a 6 mm air hose to the pneumatic push-in fitting.

3.4. Force adjustment by regulating the air supply

To regulate the floating force the user will need to adjust the air pressure accordingly.

Step 1

Supply clean air from the air filter to the spindle mount.

Step 2

Use the air regulator to regulate the air pressure and obtain the desired floating force in accordance with figure 1.

Step 3 (optional)

If an automatic floating force regulation is desired, it can be achieved with an electropneumatic regulator.

Figure 1. Floating force vs. supplied air pressure

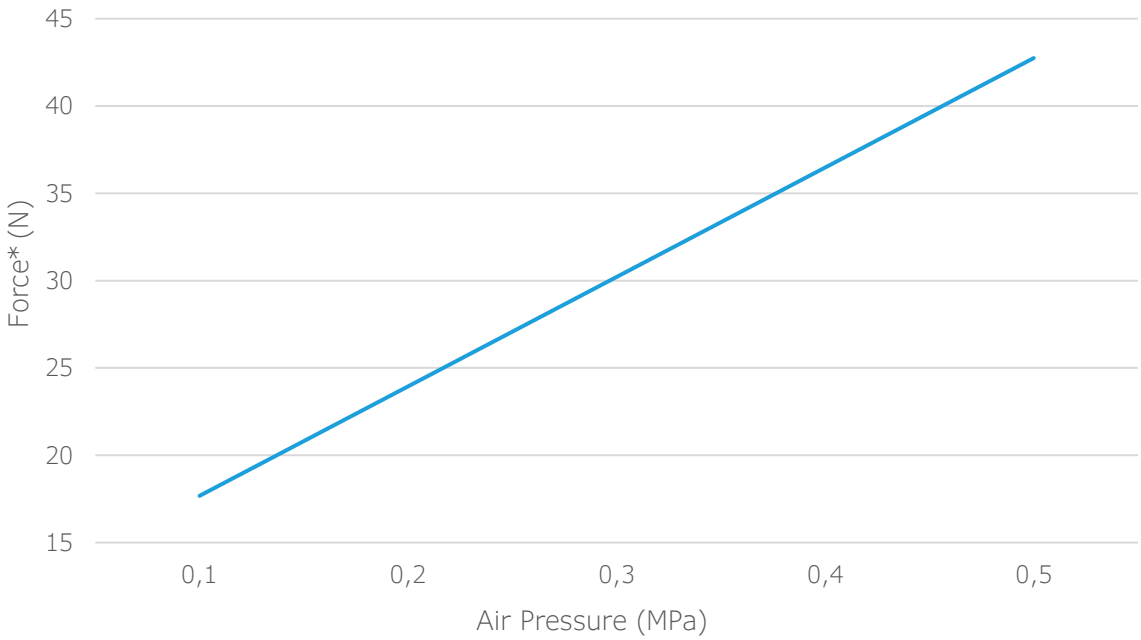

** force in N registered at spindle-point 100mm below bottom plate, when change is 1.0 degree*

Nordbo Robotics
Agerhatten 27A, Entrance 4
DK- 5220 Odense, Denmark

Phone: +45 81 81 98 81
info@nordbo-robotics.com
CVR/VAT: 34697728

NORDBO
ROBOTICS

Copyright © 2018 by Nordbo Robotics. All rights reserved